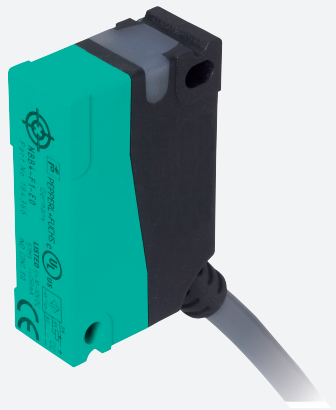

Inductive sensor

NBN8-F1-E2

- 8 mm non-flush
- 3-wire DC

Dimensions

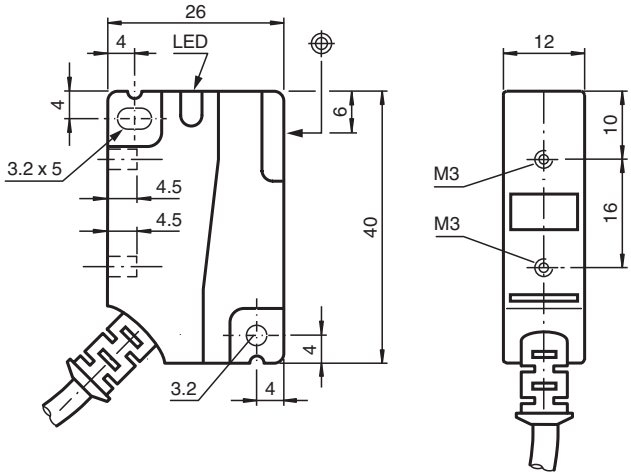

Technical Data

General specifications		
Switching function		Normally open (NO)
Output type		PNP
Rated operating distance	s_n	8 mm
Installation		non-flush
Output polarity		DC
Assured operating distance	s_a	0 ... 6.48 mm
Reduction factor r_{Al}		0.45
Reduction factor r_{Cu}		0.45
Reduction factor r_{304}		0.7
Reduction factor r_{Brass}		0.55
Output type		3-wire
Nominal ratings		
Operating voltage	U_B	10 ... 30 V DC
Switching frequency	f	0 ... 1400 Hz
Hysteresis	H	typ. 5%
Reverse polarity protection		reverse polarity protected

Release date: 2025-11-11 Date of issue: 2025-11-11 Filename: 184376_eng.pdf

Technical Data

Short-circuit protection		pulsing
Voltage drop	U_d	≤ 2.5 V
Rated insulation voltage	U_{BIS}	60 V
Operating current	I_L	0 ... 250 mA
Off-state current	I_r	0 ... 0.01 mA typ. 0.1 µA at 25 °C
No-load supply current	I_0	≤ 15 mA
Switching state indicator		LED, yellow
Functional safety related parameters		
$MTTF_d$		1640 a
Mission Time (T_M)		20 a
Diagnostic Coverage (DC)		0 %
Compliance with standards and directives		
Standard conformity		
Standards		EN IEC 60947-5-2
Approvals and certificates		
Protection class		II
Rated insulation voltage	U_i	60 V
Rated impulse withstand voltage	U_{imp}	800 V
UL approval		cULus Listed Load Type: General Purpose Circuitry: Class 2 Power Source Enclosure Type Rating: Type 1 Supply/Switching Voltage: 30 V DC Output Switching Current: 250 mA
CCC approval		CCC approval / marking not required for products rated ≤36 V
Ambient conditions		
Ambient temperature		-25 ... 70 °C (-13 ... 158 °F)
Mechanical specifications		
Connection type		cable
Housing material		PA
Sensing face		PA
Degree of protection		IP67
Cable		
Wire end ferrules		yes
Cable diameter		5.2 mm ± 0.2 mm
Bending radius		> 10 x cable diameter
Material		PVC
Color		grey
Number of cores		3
Core cross section		0.5 mm^2
Length	L	2 m
Tightening torque, fastening screws		Threading M3 ≤ 1.1 Nm
Dimensions		
Height		40 mm
Width		12 mm
Length		26 mm

Connection Assignment

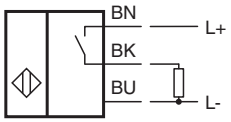

Release date: 2025-11-11 Date of issue: 2025-11-11 Filename: 184376_eng.pdf