# Product data sheet

Specifications

## Electromechanical pressure sensor, Pressure sensors XM, switch XMLA 10 bar, fixed scale 1 threshold, 1 C/O

XMLA010A2S11

## Main

| | |
|---|---|
| **Range of product** | OsiSense XM |
| **Product or component type** | Electromechanical pressure sensor |
| **Pressure sensor type** | Electromechanical pressure sensor |
| **Device short name** | XMLA |
| **Pressure rating** | 10 bar |
| **Controlled fluid** | Air (0…70 °C)<br>Fresh water (0…70 °C)<br>Hydraulic oil (0…70 °C) |
| **Fluid connection type** | G 1/4 (female) conforming to ISO 228 |
| **Electrical connection** | Screw-clamps terminals, 1 x 0.5...2 x 2.5 mm²<br>1 connector Pg 13 |
| **AWG gauge** | AWG 20...AWG 14 |
| **Cable entry** | Cable gland 9…13 mm |
| **Contacts type and composition** | 1 C/O |
| **Product specific application** | - |
| **Pressure switch type of operation** | Detection of 1 single threshold |
| **Electrical circuit type** | Control circuit |
| **Scale type** | Fixed differential |
| **Local display** | With |
| **Adjustable range of switching point on rising pressure** | 0.6…10 bar |
| **Adjustable range of switching point on falling pressure** | 0.1…9.5 bar |
| **Maximum permissible accidental pressure** | 22.5 bar |
| **Destruction pressure** | 45 bar |
| **Pressure actuator** | Diaphragm |
| **Materials in contact with fluid** | FPM, FKM<br>Zinc alloy |
| **Enclosure material** | Zinc alloy |
| **[In] rated current** | 3 A, B300, AC-15 (Ue = 120 V) conforming to EN/IEC 60947-5-1<br>1.5 A, B300, AC-15 (Ue = 240 V) conforming to EN/IEC 60947-5-1<br>0.1 A, R300, DC-13 (Ue = 250 V) conforming to EN/IEC 60947-5-1 |

Disclaimer: This documentation is not intended as a substitute for and is not to be used for determining suitability or reliability of these products for specific user applications

## Complementary

| | |
|---|---|
| **Natural differential at low setting** | 0.5 bar (+/- 0.05 bar) |
| **Natural differential at high setting** | 0.5 bar (+/- 0.05 bar) |
| **Maximum permissible pressure - per cycle** | 12.5 bar |
| **Terminal block type** | 4 terminals |
| **Maximum operating rate** | 120 cyc/mn |
| **Repeat accuracy** | 2 % |
| **[Ui] rated insulation voltage** | 300 V conforming to UL 508<br>500 V conforming to EN/IEC 60947-1<br>300 V conforming to CSA C22.2 No 14 |
| **[Uimp] rated impulse withstand voltage** | 6 kV conforming to EN/IEC 60947-1 |
| **Auxiliary contacts operation** | Snap action |
| **Contacts material** | Silver contacts |
| **Maximum resistance across terminals** | 25 mOhm conforming to IEC 255-7 category 3<br>25 mOhm conforming to NF C 93-050 method A |
| **Short-circuit protection** | 10 A cartridge fuse, type gG (gl) |
| **Mechanical durability** | 5000000 cycles |
| **Setting** | External |
| **Height** | 113 mm |
| **Depth** | 75 mm |
| **Width** | 35 mm |
| **Net weight** | 0.685 kg |

## Environment

| | |
|---|---|
| **Standards** | CE<br>CSA C22.2 No 14<br>UL 508<br>EN/IEC 60947-5-1 |
| **Product certifications** | UL<br>EAC<br>LROS (Lloyds register of shipping)<br>CCC<br>CSA<br>BV |
| **Protective treatment** | TC standard version |
| **Ambient air temperature for operation** | -25…70 °C |
| **Ambient air temperature for storage** | -40…70 °C |
| **Operating position** | Any position |
| **Vibration resistance** | 4 gn conforming to IEC 60068-2-6 (f = 30…500 Hz) |
| **Shock resistance** | 50 gn conforming to IEC 60068-2-27 |
| **Electrical shock protection class** | Class I conforming to IEC 1140<br>Class I conforming to IEC 536<br>Class I conforming to NF C 20-030 |
| **IP degree of protection** | IP66 conforming to EN/IEC 60529 |

## Packing Units

| | |
|---|---|
| **Unit Type of Package 1** | PCE |

| | |
|---|---|
| **Number of Units in Package 1** | 1 |
| **Package 1 Weight** | 708 g |
| **Package 1 Height** | 4 cm |
| **Package 1 width** | 8.6 cm |
| **Package 1 Length** | 12.1 cm |
| **Unit Type of Package 2** | S02 |
| **Number of Units in Package 2** | 13 |
| **Package 2 Weight** | 9.508 kg |
| **Package 2 Height** | 15 cm |
| **Package 2 width** | 30 cm |
| **Package 2 Length** | 40 cm |

## Offer Sustainability

| | |
|---|---|
| **Sustainable offer status** | Green Premium product |
| **REACh Regulation** | REACh Declaration |
| **EU RoHS Directive** | Pro-active compliance (Product out of EU RoHS legal scope)<br>EU RoHS Declaration |
| **Mercury free** | Yes |
| **RoHS exemption information** | Yes |
| **Environmental Disclosure** | Product Environmental Profile |
| **California proposition 65** | WARNING: This product can expose you to chemicals including: Diisononyl phthalate (DINP), which is known to the State of California to cause cancer, and Di-isodecyl phthalate (DIDP), which is known to the State of California to cause birth defects or other reproductive harm. For more information go to www.P65Warnings.ca.gov |

## Contractual warranty

| | |
|---|---|
| **Warranty** | 18 months |

## Dimensions

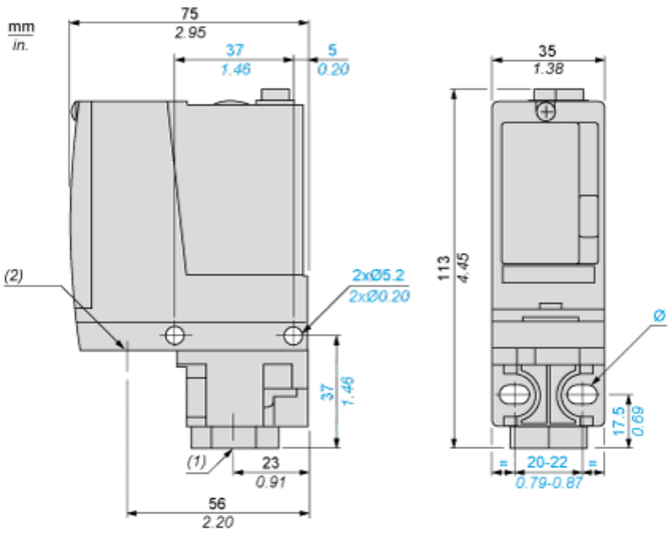


**(1)** 1 fluid entry, tapped G1/4 (BSP female)
**(2)** 1 electrical connections entry, tapped Pg 13.5
**Ø :** 2 elongated holes Ø 5.2 x 6.7

## Wiring Diagram

### Terminal Model

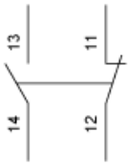

## Operating Curves

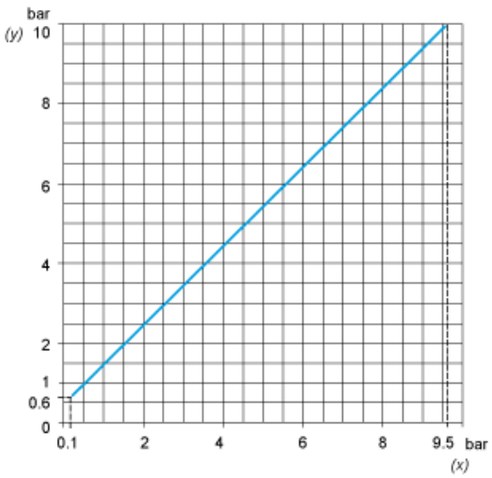


**(y)** Rising pressure
**(x)** Falling pressure

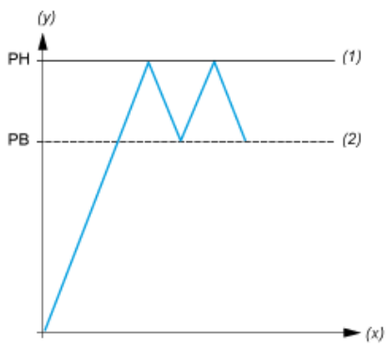


**(y)** Pressure
**(x)** Time
**(1)** Adjustable value
**(2)** Non adjustable value
**PH :** High point
**PB :** Below point