IXARC Incremental Encoder

UCD-IPH00-XXXXX-05M0-2TW

The picture is for presentation purposes only. Please refer to the detailed technical drawing at the end of the page.

Interface

Interface	Programmable Incremental
Programming Functions	PPR (1-16384), Output, Counting Direction
Configuration Tool	UBIFAST Configuration Tool (Version ≥ 1.6.3)

Outputs

Output Driver	Push-Pull (HTL)
Output Voltage High Level Push-Pull (HTL)	> 4 V @ 4.75-9 V Supply Voltage > V-3 V @ 9-30 V Supply Voltage

Downloads

- Datasheet
- 2D Drawing
- 3D Drawing Flange
- 3D Drawing Housing
- UBIFAST Configuration Tool
- CE Certificate
- UL Certificate

Accessories

Configuration/Programming Tools

- UBIFAST Configuration Tool

Couplings

- Coupling Bellow Type-06-08
- Coupling Bellow Type-08-10
- Coupling Jaw Type-06-08
- More

Displays

- AP20-00 Counter

Output Voltage Low Level Push-Pull (HTL)	< 0.5 V
Output Voltage High Level RS422 (TTL)	> 4 V
Output Voltage Low Level RS422 (TTL)	< 0.5 V
Maximum Frequency Response	1 MHz
Maximum Switching Current	50 mA per Channel

Electrical Data

Supply Voltage	4.75 – 30 VDC
Current Consumption	≤140mA @ 5V DC, ≤70mA @ 10V DC, ≤40mA @ 24V DC
Power Consumption	≤ 1.0 W
Start-Up Time	< 1 s
Min. Load Resistance	120 Ω
Reverse Polarity Protection	Yes
Short Circuit Protection	Yes
EMC: Emitted Interference	DIN EN 61000-6-4
EMC: Noise Immunity	DIN EN 61000-6-2
MTTF	280 years @ 40 °C

Sensor

Technology	Magnetic
Accuracy (INL)	±0.0878° (≤ 12 bit)
Duty Cycle	180° ± 27° (Speed > 100RPM)
Phase Angle	90° ± 14° (Speed > 100RPM)

Environmental Specifications

Protection Class (Shaft)	IP65
Protection Class (Housing)	IP65
Operating Temperature	-30 °C fixed (-22 °F), -5 °C flexible (+23 °F) - +80 °C (+176 °F)
Humidity	98% RH, no condensation

AP20-D0 Counter (4 dig. o/p)

AP20-0A Counter (analog o/p)

More

Competitor Cross Reference Guide

ENCODERMATCH POSITAL

Find a Replacement for your Encoder in 4 Easy Steps

More

Contact

Contact Us

Mechanical Data

Mechanical Data

Housing Material	Steel
Housing Coating	Zinc Plated
Flange Type	Clamp, ø 50 mm
Flange Material	Aluminum
Shaft Type	Solid, Single Flat, Length = 15 mm
Shaft Diameter	ø 8 mm (0.31")
Shaft Material	Stainless Steel V2A (1.4305, 303)
Max. Shaft Load	Axial 40 N, Radial 110 N
Rotor Inertia	≤ 30 gcm² [≤ 0.17 oz-in²]
Friction Torque	≤ 3 Ncm @ 20 °C (4.2 oz-in @ 68 °F)
Max. Permissible Mechanical Speed	≤ 12000 1/min
Shock Resistance	≤ 100 g (half sine 6 ms, EN 60068-2-27)
Permanent Shock Resistance	≤ 10 g (half sine 16 ms, EN 60068-2-29)
Vibration Resistance	≤ 10 g (10 Hz – 1000 Hz, EN 60068-2-6)
Length	43 mm (1.69")
Weight	480 g (1.06 lb)
Minimum Mechanical Lifetime (10^8 revolutions with Fa/Fr)	430 (20 N / 40 N), 150 (40 N / 60 N), 100 (40 N / 80 N), 55 (40 N / 110 N)

Electrical Connection

Connection Orientation	Axial/Radial
Connection Type	Cable / Connector
Cable Length	2 m [79"]
Wire Cross Section	0.14 mm² / AWG 26
Material / Type	PVC
Cable Diameter	6 mm (0.24 in)
Minimum Bend Radius	46 mm (1.81") fixed, 61 mm (2.4") flexing

Certification

Approval	CE + cULus

Product Life Cycle

Product Life Cycle	New

Connection Plan

SIGNAL	CABLE COLOR
A	Green
/A	Yellow
B	Gray
/B	Pink
Z	Blue
/Z	Red
Power Supply	Brown
GND	White
Shielding	Shield

Connector-View on Encoder

Pulse Diagram

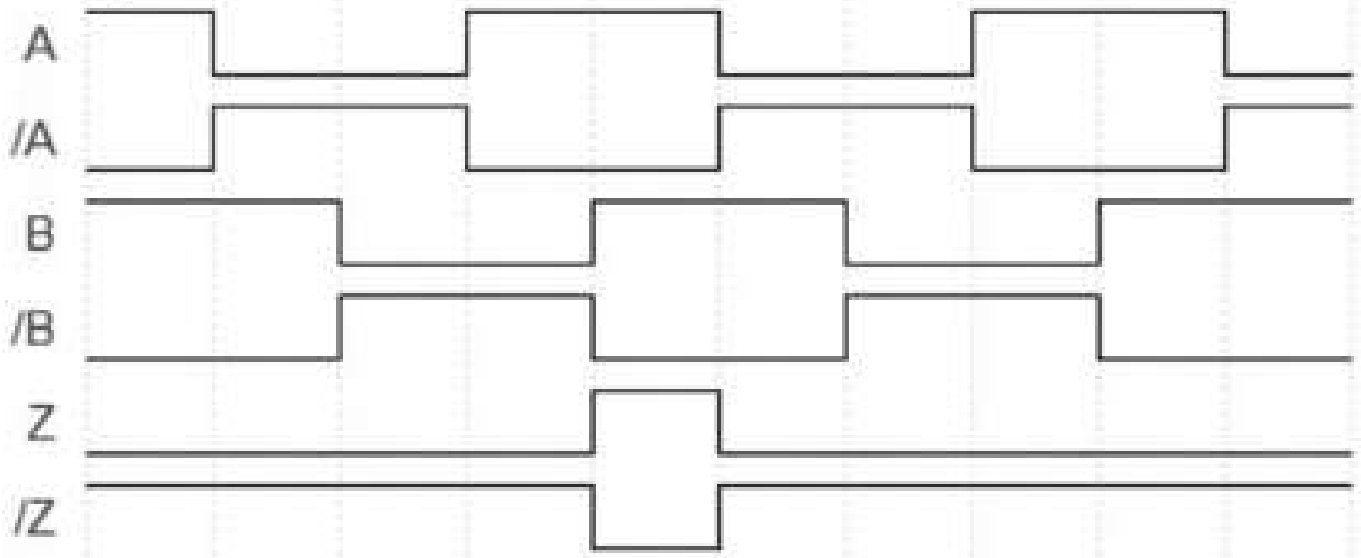

Rotation Clockwise (seen on shaft)

Dimensional Drawing

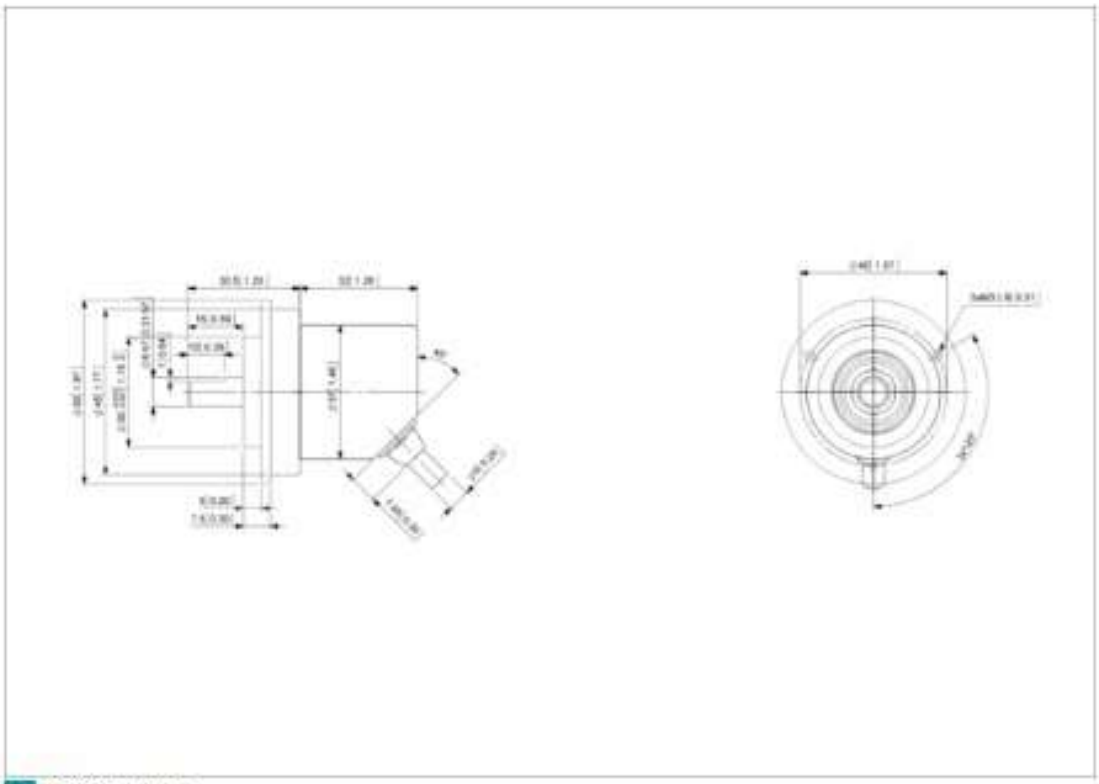

2D Drawing

The picture and drawing are for general presentation purposes only. Please refer to the "Download" section for detailed technical drawings. All dimension in [inch] mm.

© FRABA B.V., All rights reserved. We do not assume responsibility for technical inaccuracies or omissions. Specifications are subject to change without notice.

© FRABA B.V., All rights reserved.